T 0233

MONROE

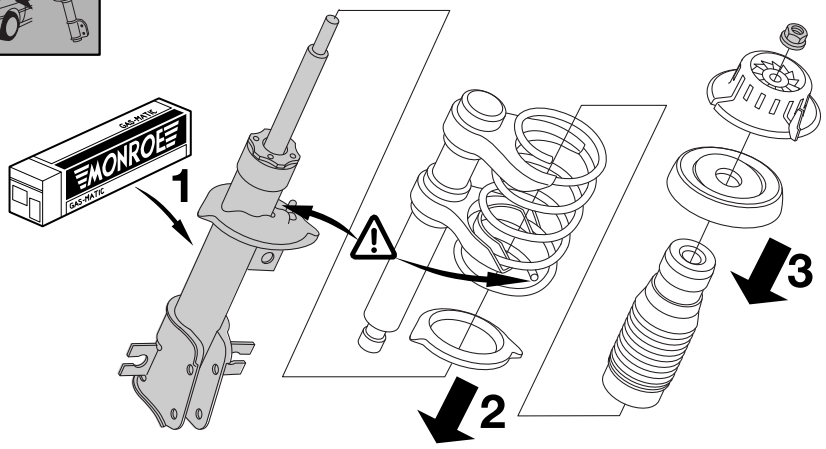

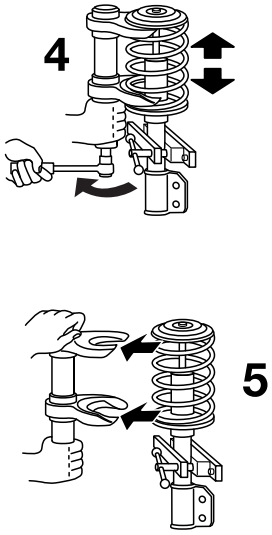

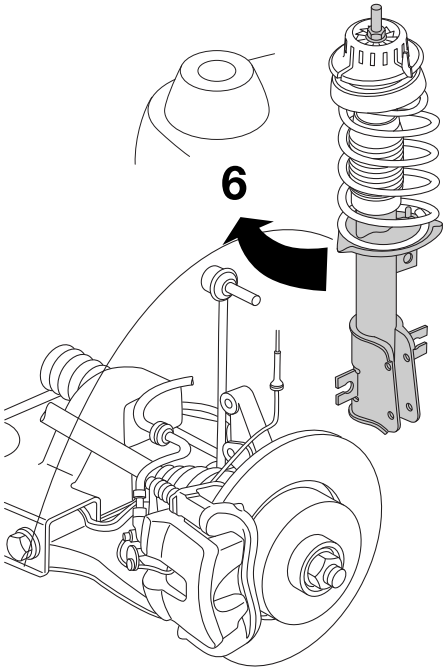

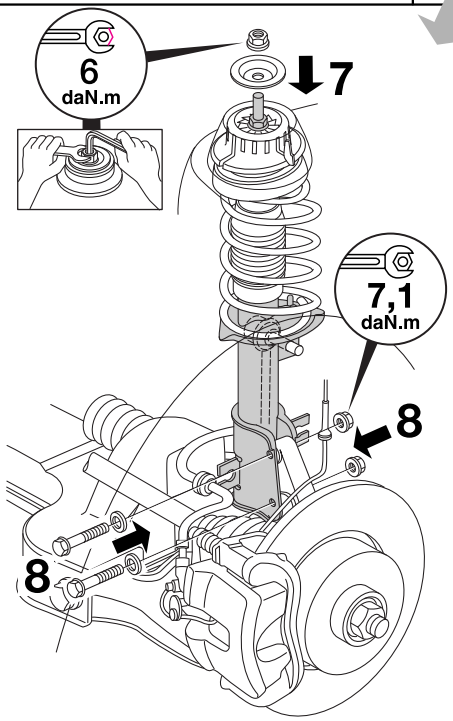

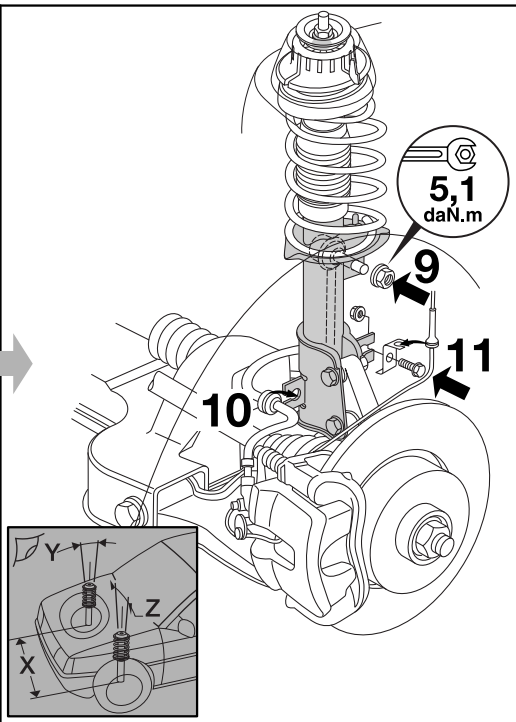

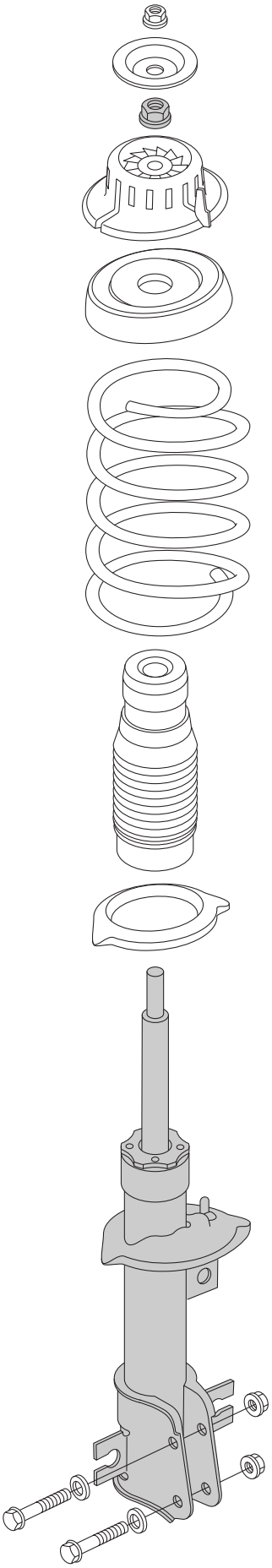

© Monroe all rights reserved.