SERVICE

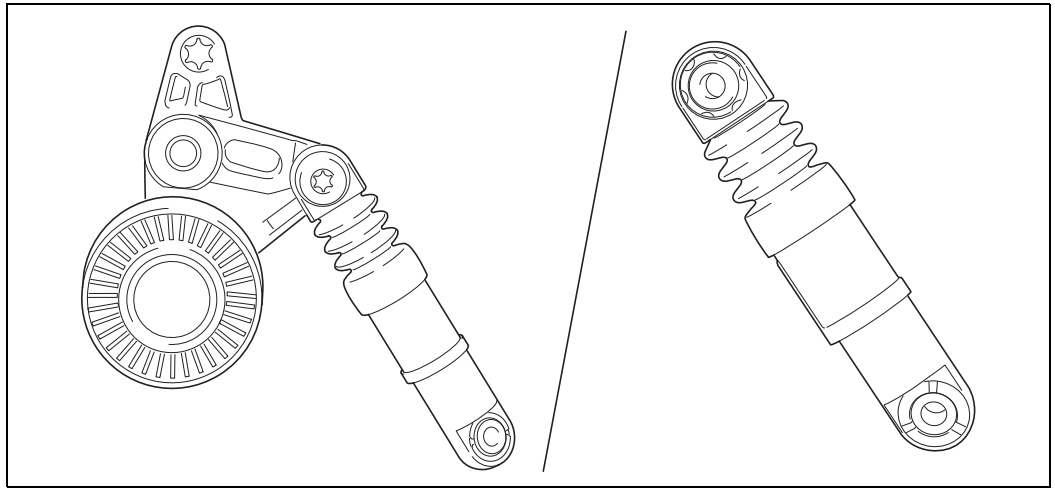

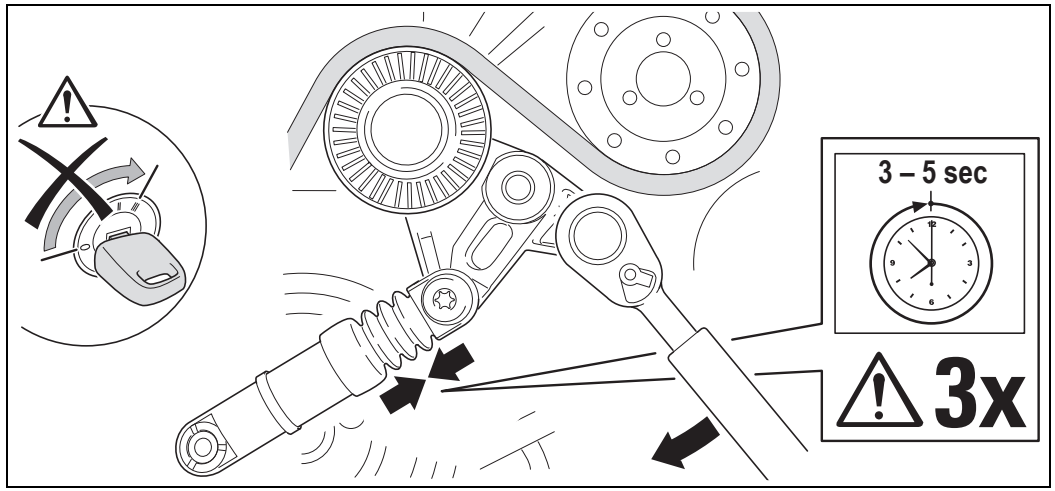

999 6005 200 © 2010 Schaeffler Automotive Aftermarket GmbH & Co.oHG