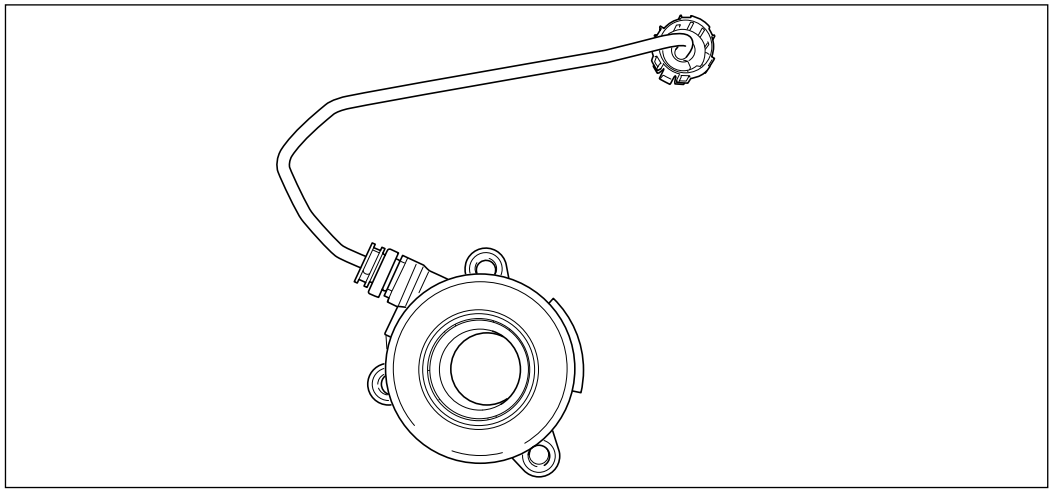

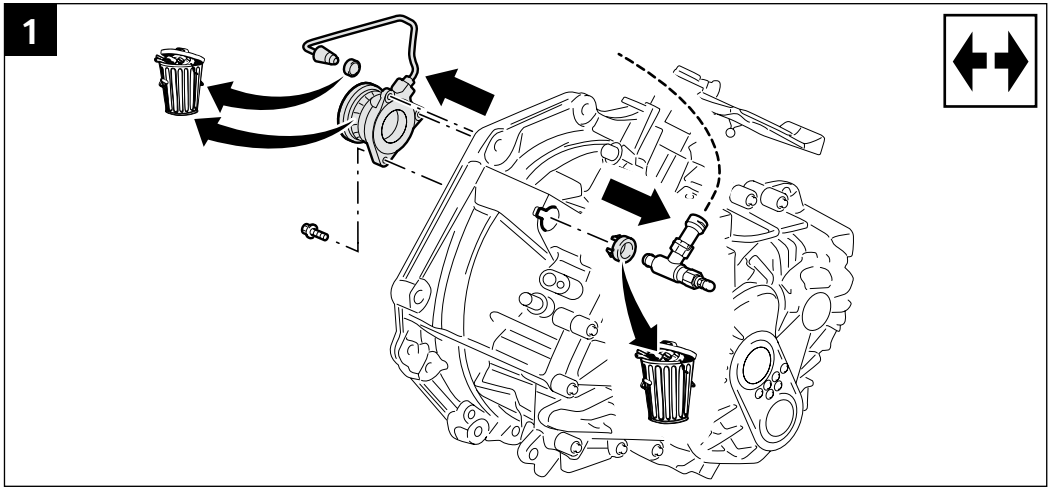

SCHAEFFLER
REP XPERT

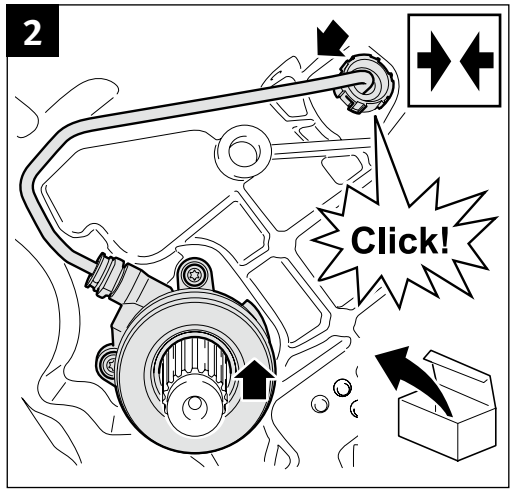

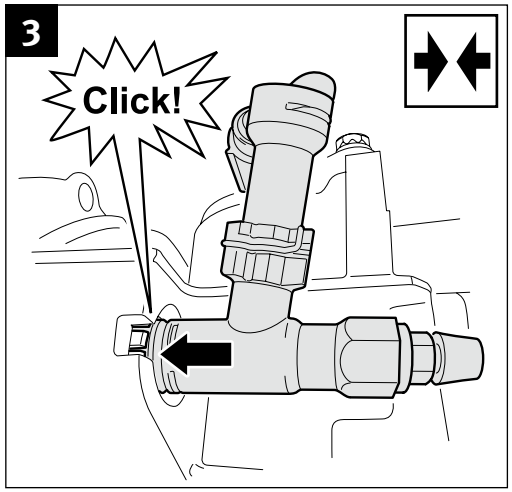

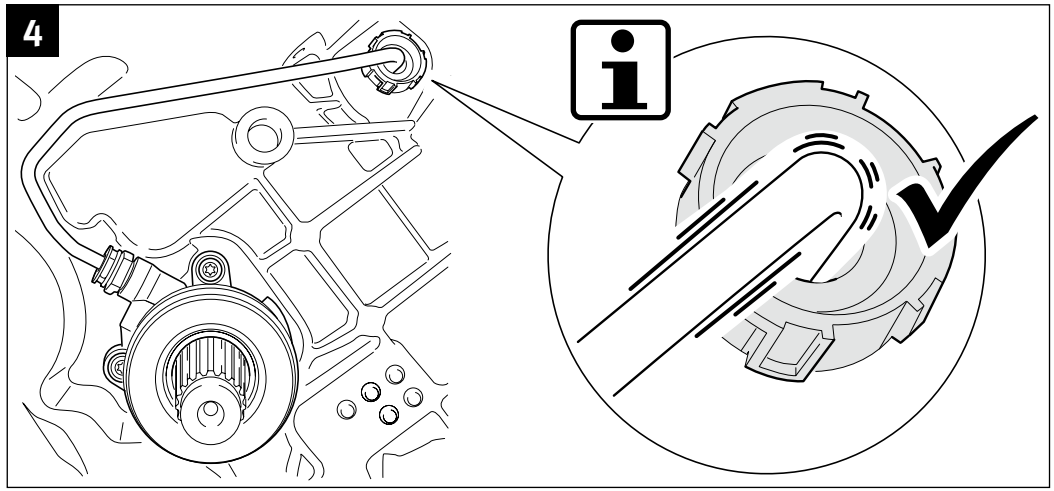

999 6008 590 © 2016 www.Schaeffler-Aftermarket.com