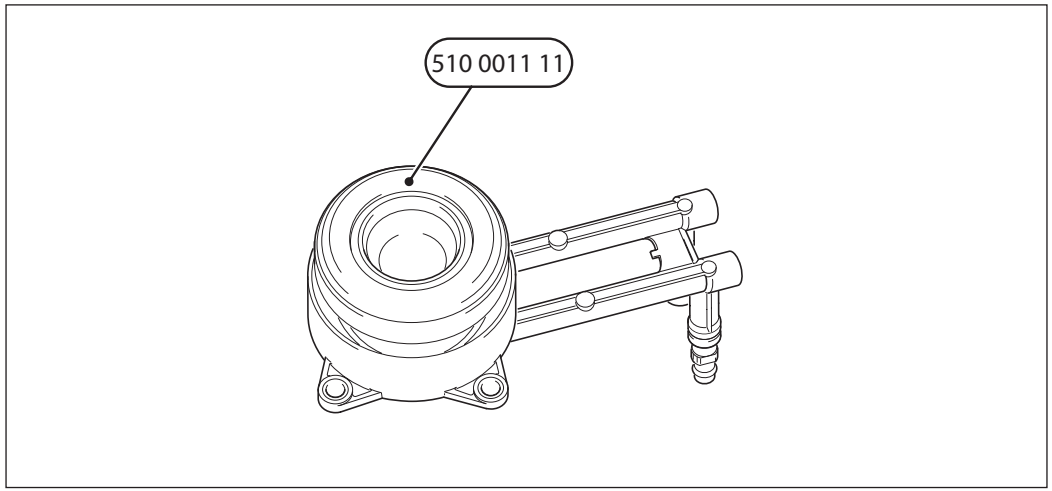

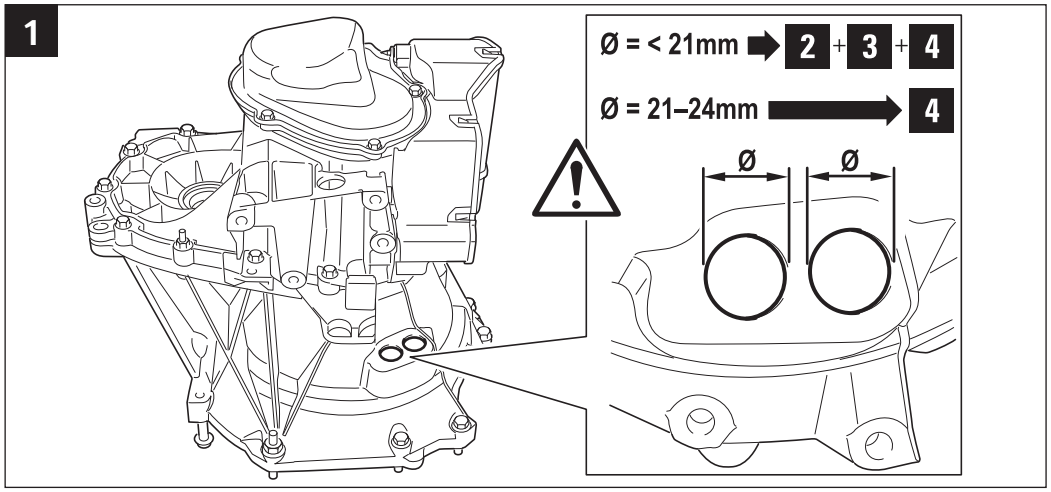
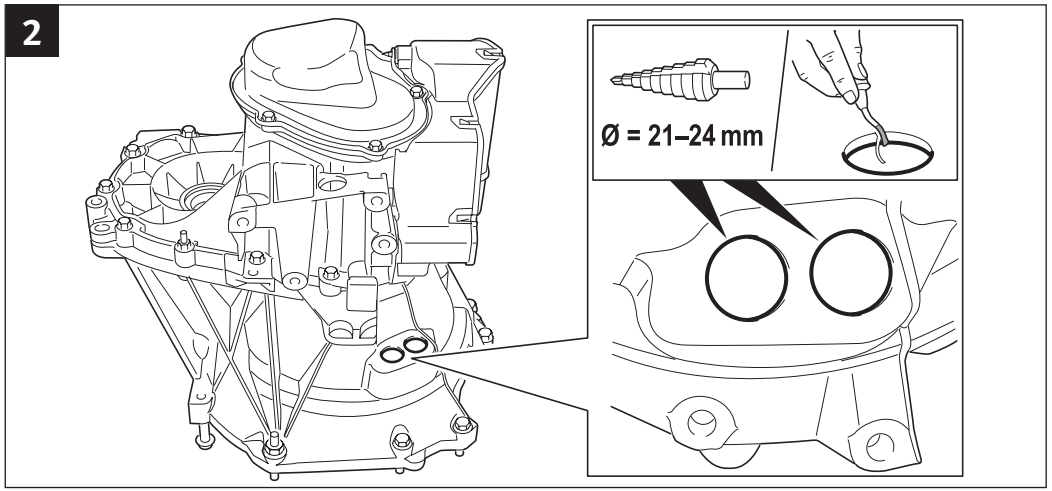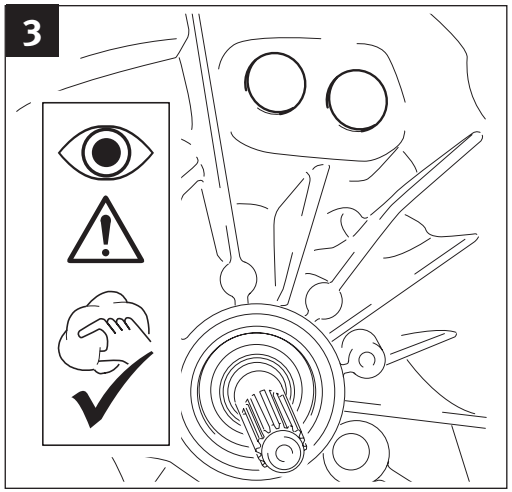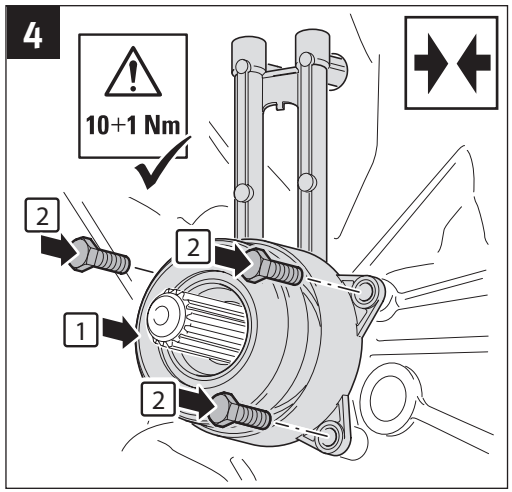
SCHAEFFLER REP XPERT LUK INA FAG RUVILLE