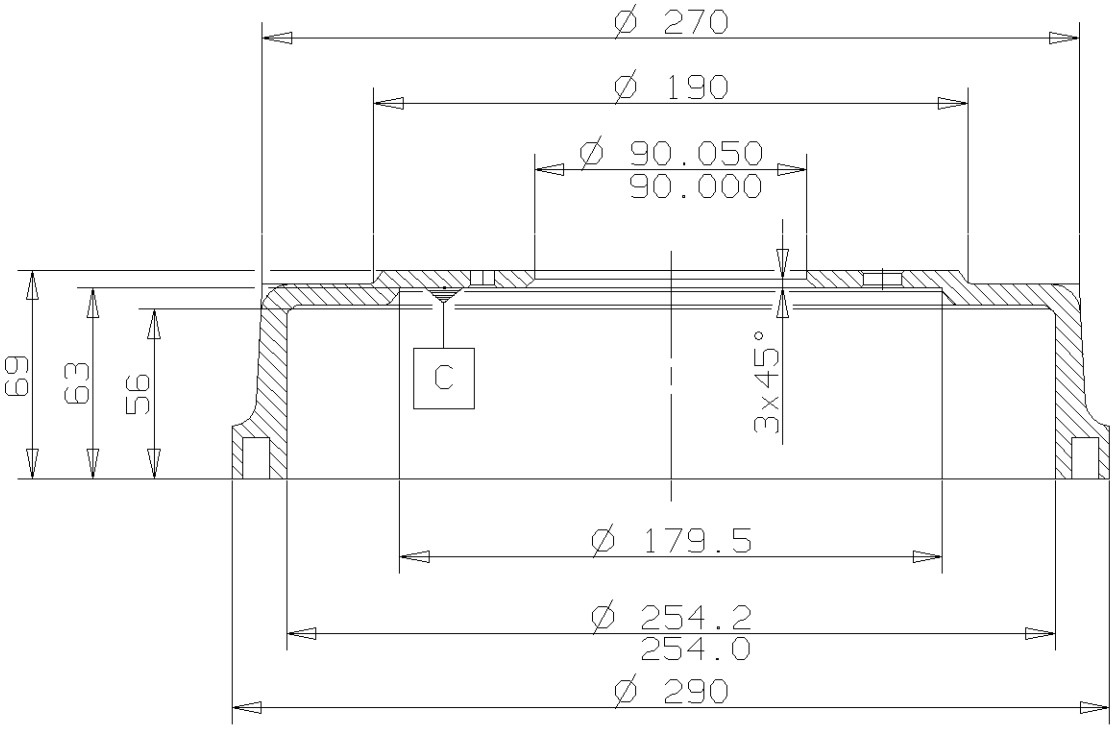

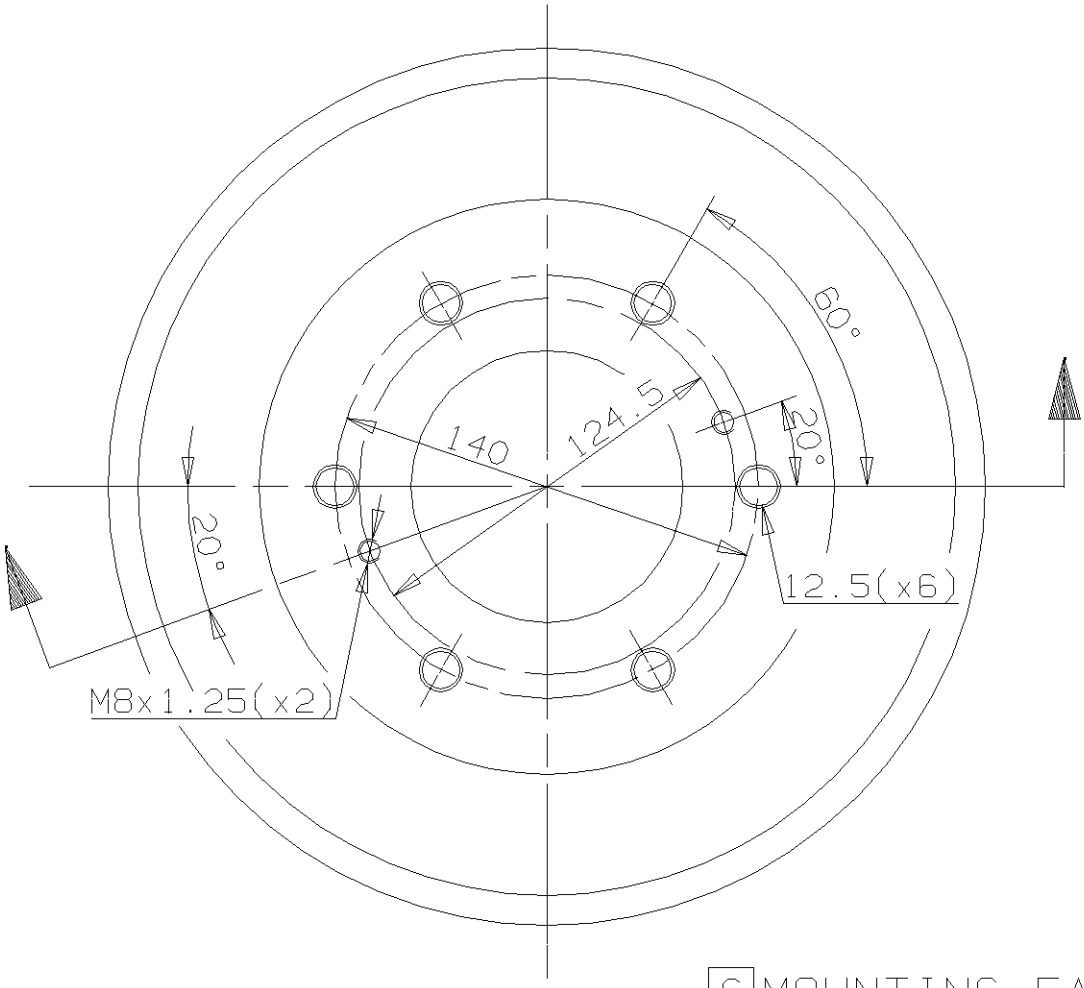

C MOUNTING FACE

Max.DIA. 255.5 mm

Weight 5.7 Kg