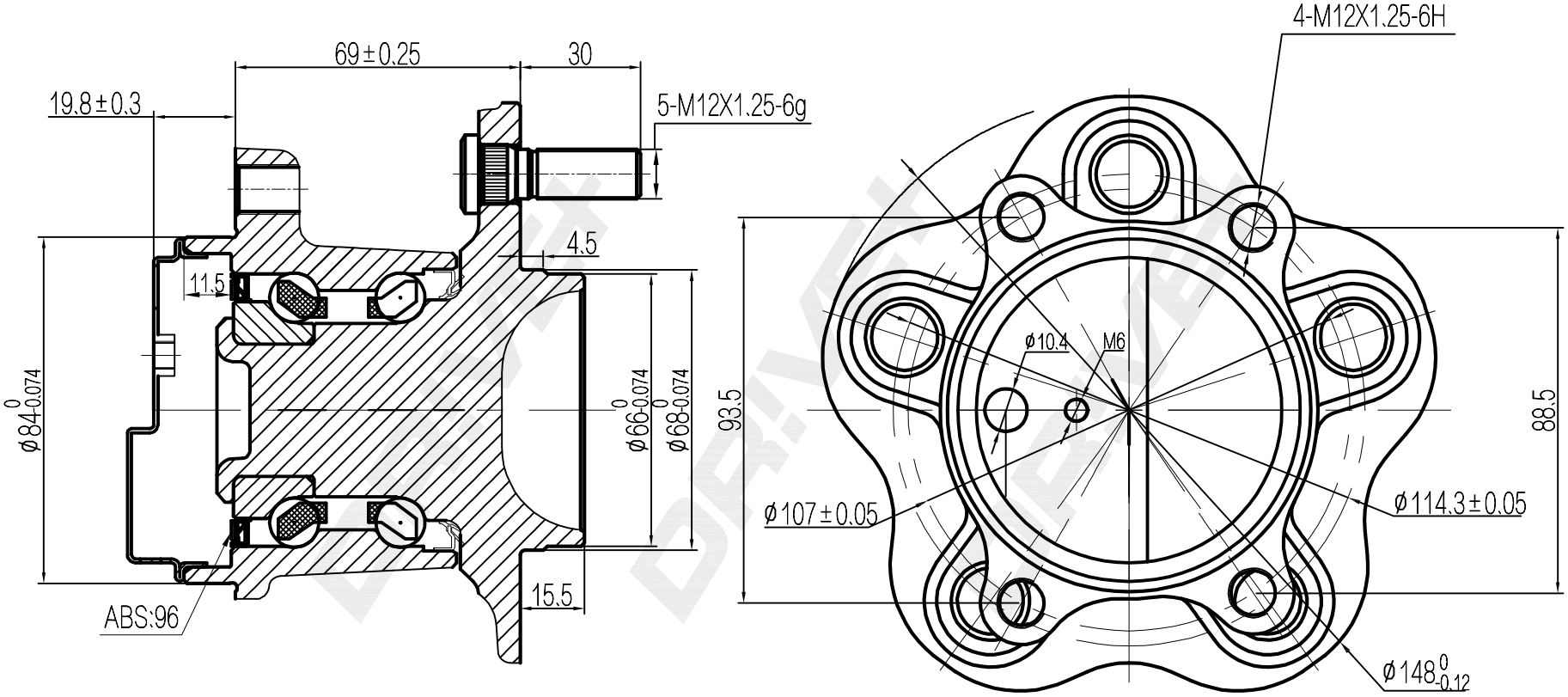

DP Number	Part Number	Drawing Version Number	Drawing Issue Date
DP2010.10.0879	DRW0879	V1	2025.04.21